**Impact Plate Anchor System**

The Impact Plate Anchor System comes in several kit options.

**When picking up from our physical location:**

**-Galvanized all thread** comes in two standard options. Option one is a single ¾" x 12' rod, or option two ¾" x 7' rods, with a coupler.

**-Wall Plates** come in two standard options. Option 1 is a ¼" thick x 12" wide x 28" long, pre-tensioned, cold galvanized plate. This steel is pre tensioned to ensure better contact and a stronger repair. Option 2 is a 8" wide x 11.5 lb per ft x 90" long c-channel. *Custom sizes and thickness available by special order.*

**When having the product shipped:**

**-Galvanized all thread** comes in one standard option of two ¾" x 7' all thread with coupler.

**-Wall Plate** comes in one standard option of a ¼" thick x 12" wide x 28" long, pre-tensioned, cold galvanized plate. This steel is pre tensioned to ensure better contact and a stronger repair.

**Soil Plates:** Soil Plates come in 3 standard sizes, each with its own application.

- **Large Soil Plate** is two ¼" thick x 12" wide x 28" long, pre-tensioned, cold galvanized plates. The plates are installed to create an X that is able to function as a stand alone anchor and is suitable for retaining most residential foundations and retaining walls.

- **Medium Soil Plate** is one ¼" thick x 12" wide x 28" long, pre-tensioned, cold galvanized plate. The medium plate is for use with concrete reinforced (deadman) style anchors being installed in loose, saturated, or sandy soils.

- **Small Soil plate** is ¼" thick x 12" wide x 15" long, pre-tensioned, cold galvanized plates. The small plate is for use with concrete reinforced (deadman) style anchors being installed in dense, dry, clay, or highly compacted soils.

***Small and Medium plates are meant to be placed against the soil on the tension side of the trench. An additional plate and hardware may be required at the end of the all thread that is being embedded in the concrete anchor. This plate and hardware is available as a separate item when ordering.***

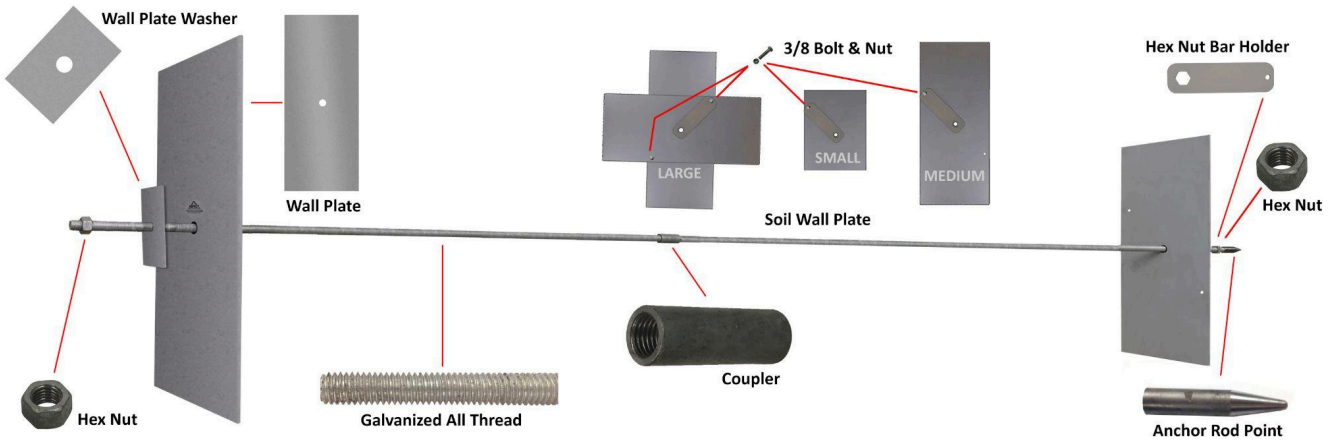

**About our Wall and Soil Plates**

Pretensioned Steel: Our ¼" thick Wall and Soil Plates are pretensioned and can be visually inspected for tensional direction. The Wall Plates are marked with a label applied to the crowned side of the plate. The soil plates are welded so that the crowned side accepts the square tension nut. Pretensioning the steel creates a crown in the steel that will flatten out as the plates are tightened down and the tension is increased on the all thread that connects the Wall Plate to the Soil Plate.

**About our galvanization**

General Properties: Our wall and soil plates are coated in a high-quality cold galvanizing compound which affords true galvanic anti-corrosion protection to metals. The dried film is 95% metallic zinc. Organic Zinc-Rich coating containing 95% metallic zinc, by weight in the dried film; recognized under the Component Program of Underwriter's Laboratories, Inc. as an equivalent to hot-dip galvanizing; conforming to Federal Specification DOD-P-21035A (formally MIL-P21035A) for repair of hot-dip galvanizing and meeting the requirements of Military Specification MIL-P-26915A USAF Specification for Zinc-Rich Paints; having been registered to the International Organization for Standardization ISO 9001 standard for quality.

**About our all thread**

Our standard all thread is a ¾" hot dipped galvanized rod with a minimum tensile strength of 120,000 PSI. Standard length is 7' to make it shippable. Our standard coupler for combining multiple pieces of all thread is a custom machined 3" coupling nut that is designed specifically for our systems.

**About our Driving Point**

Our driving point for ¾" all thread is attached to the driving end of the all thread. The Driving Point will help the rod drive straighter and keep the threads from being damaged. The Driving Point will help the rod to travel around and even through roots and smaller rocks that may be in the line of travel.

**Installation Methods**

Our Plate Anchor System can be used when stabilizing or straightening foundation walls. Here we will outline the standard method of installation. There are many factors that can change the method of installation from one install to the next and we highly suggest that our Plate Anchors are installed only by highly experienced experts. Changing the methods of installation that are being outlined here can significantly reduce the success rate of the product.

**Spacing of the Impact Plate Anchor System:**

- Reinforced Concrete no less than 8" thick, 6' on center, no more than 4' from any corner. - Reinforced Concrete 6"-8" thick, 5' on center, no more than 4' from any corner - Cinder block or masonry walls 8" thick, 4' on center, no more than 3' from any corner - Stone walls no less than 14" thick, 4' on center, no more than 3' from any corner

**Drill holes** in the wall using a 1" bit for ¾" all thread. The hole must be drilled at a downward angle of 1" per foot**.** That would be ¾" downward angle on an 8" wall.

**Excavation for Soil Plates:** Standard installation should put the tension side of the excavation at 13' from the wall with no less than 9' of undisturbed soil between the wall and the tension side of the excavation. Excavation should be no less than 12' from the wall when the wall is being excavated assuming a 3' wide trench.

Excavation should be large enough to accommodate the soil plate and deep enough that the all thread can meet the Soil Plate's center hole at a point that is 9"-12" deeper than the hole in the wall that the all thread will reside in.

When using concrete for a "Deadman" style Plate Anchor we do recommend no less than 80 Lbs of concrete per foot of all thread.

**Driving the all thread:** The all thread should be driven using no less than a 21 lb SDS Max chipping hammer. A proper sized ground rod driver for the chipper is best for installing the rod. Using an Impact Driving Point will help to insure a smoother installation of the all thread. Using a tape measure, measure the height from floor to the hole drilled in the wall. Next measure from the floor to the all thread where the driving tool is attached. Raise the rod until the measurement is 1" per foot higher than the drilled hole and begin driving the all thread.

Drive the all thread until it protrudes through the tension side of the excavation. The rod must be lower than the drilled hole by 1" per foot in order to retain structural integrity.

**Installing the Soil Plates:**



Before placing the “Large, Medium, or Small“ Soil Plate(s) in the excavated hole. The Hex Nut Holder Bar must be installed. This bar holds the ¾” galvanized nut in place to allow torque.

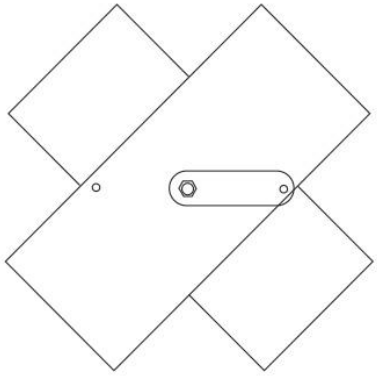

**Large Soil Plates :** This plate will have a 1” hole in the center, and two ⅜” holes, diagonally drilled at either side. The Hex Nut Holder Bar must be placed and lined up with one of the two holes. Then the two plates and Hex Nut Holder Bar can be bolted together using the ⅜” galvanized bolts provided.

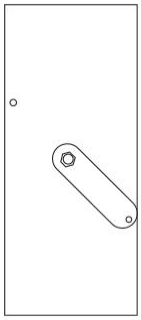

**Medium Soil Plate :** This plate will have a 1” hole in the center, and two ⅜” holes, diagonally drilled at either side. The Hex Nut Holder Bar must be placed and lined up with one of the two holes. Then bolted on using the ⅜” galvanized bolt provided.



**Small Soil Plate :** This plate will have a 1” hole in the center, and one ⅜” hole, diagonally drilled. The Hex Nut Holder Bar must be placed and lined up with the hole. Then bolted on using the ⅜” galvanized bolt provided.

When the Hex Nut Holder Bar is installed, place the Soil Plates in the excavated hole and slide the plate up to the soil.

**Installing the Wall Plate:** The Wall Plate is marked with a label to show which side should face away from the wall. This is important as the Wall Plate is pretensioned and has a crown that must face towards the installer. Place the Wall Plate over the all thread on the interior side of the wall. Place the 4” x 6” washer over the all thread next (note: the washer is also crowned and should be crowned towards the installer)
Thread the ¾” Hex nut onto the all thread and tighten until the square nut on the exterior plate seats itself into the square socket.

**Tensioning the Plate Anchor:** Using a torque wrench, tighten the hex nut at the wall plate to no more than 87 ft-lbs of dry torque. The torque placed on the Wall Plate nut will create an estimated 8,000 lb to 8,300 lb of clamping force. NOTE: When straightening a wall you must not expend more than the 87 ft-lbs of dry torque.

**Document the install:** Once complete you need to document the placement of each anchor including the height of the hole drilled in the wall, the amount of fall per inch of rod, and the torque of the Wall Plate nut.

**Only trained experts that are experienced in the installation and placement of Plate Anchors should install this product. All repairs should be designed and inspected by a structural engineer. All repairs should meet local codes and installation guidelines for your city, county, or region. All excavations should be protected by following local safety guidelines and backfilled as soon as the project is completed. Dispose of all debris in a safe manner and in accordance with local guidelines**. **Always wear eye and hand protection while installing these products.**

Any further questions please feel free to email : orders@mfs-ent.com